IF IN DOUBT ASK ..... ENGINEERING | 7 | 6 | 5 | 4 | 3 | 2 | 1

R | DO NOT SCALE THE DRAWING | ALL DIMENSIONS ARE IN mm UNLESS OTHERWISE STATED | REMOVE ALL BURRS AND SHARP EDGES

DIMENSIONAL DRAWING

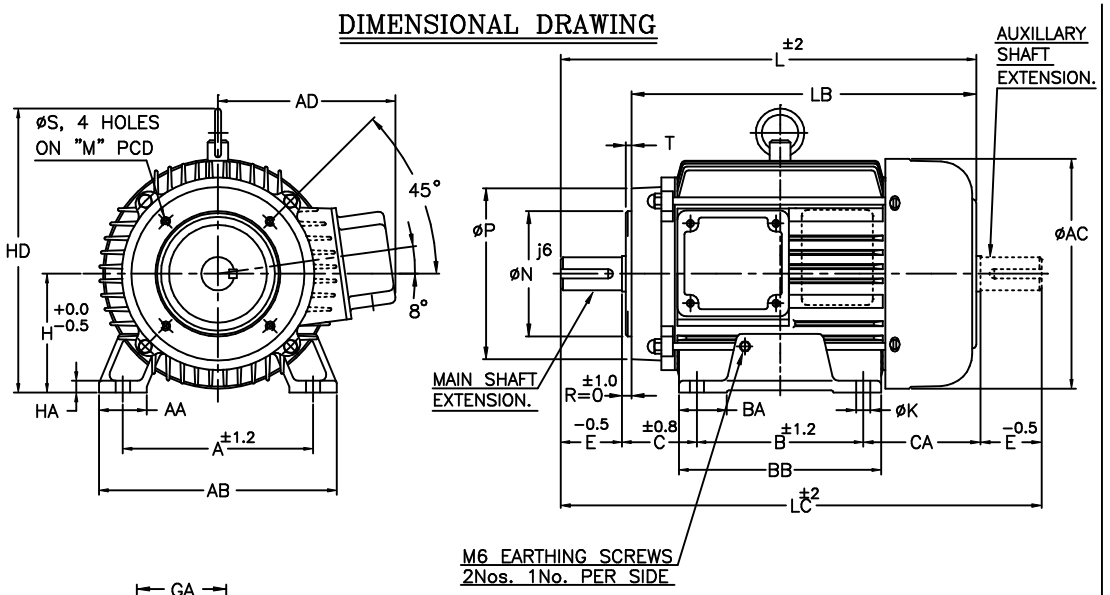

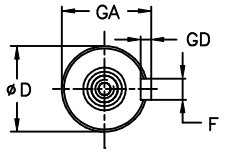

DETAILS OF MAIN & AUXILIARY SHAFT EXTENSION

NOTE : 1. DIMENSIONS ARE AS PER IS:1231 & 2223
2. DEGREE OF PROTECTION: IP:55.
3. TOLERANCE ON 'D' : k6. TOLERANCE ON 'N' : j6.
4. PROTECTED CENTRE HOLE AT SHAFT EXTENSION AS PER IS:2540. "M12 X 28" FOR 'D'– ø38
5. TERMINAL BOX CAN BE ROTATABLE THROUGH 360° IN STEPS OF 90°.
6. KEY & KEYWAY ARE AS PER IS:2048 & TOLERENCE ON KEYWAY IS P9.

TERMINAL BOX ARRANGEMENT

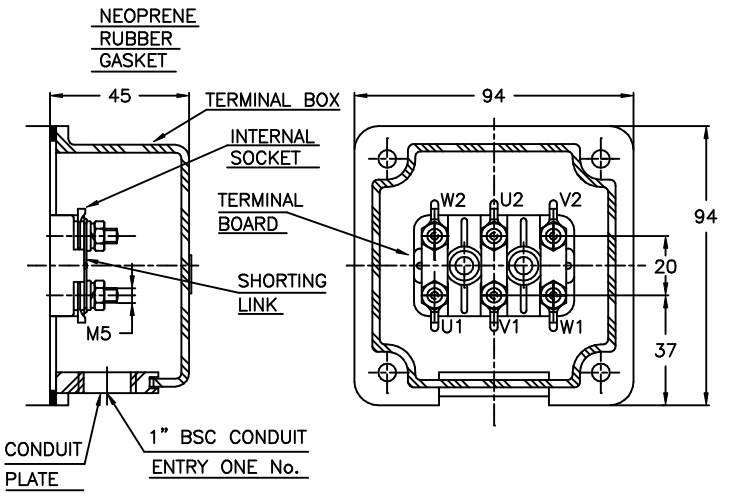

NOTE: MAX. CABLE SIZE : MAIN–1x3Cx16 sqmm.

SL. NO.	FRAME	A	AA	AB	AC	AD	B	BA	BB	C	CA	D	E	F	GA	GD	H	HA	HD	K	L	LB	LC	M	N	P	S	T
1	FCPM 132S	216	40	256	260	180	140	40	180	89	137	38	80	10	41	8	132	17	308	12	442	362	526	165	130	200	M12	3.5
2	FCPM 132M						178		218												480	400	564					

Z122623100JR

REV.	ZONE	DCN.No.	BRIEF RECORD	SIGNATURE	DATE	PRINTS ISSUED TO
1	–	0122209	REDRAWN IN A NEW FORMAT.	Sd/–	10/01/09	QA MARKETING PRODUCTION

THIS SUPERSEDES ..... FROM dt ..... AS PER DCN No.....
THIS SUPERSEDED BY ..... FROM dt. ..... AS PER DCN No.....

MATERIAL SPECIFICATION	RAW MATERIAL SIZE	WEIGHT kg RM	FIN.
—	—	—	—

CASTING/FAB REF. — No.P.S.: —

SCALE NTS

USED ON FCPM132

RE DRAWN	CHECKED	STANDARD	APPROVED
sd/–	sd/–	sd/–	sd/–
dt 10/01/09	dt 10/01/09	dt 10/01/09	dt 10/01/09

TITLE: DIMENSION SHEET

32262398R1

SHEET ONE OF ONE

KIRLOSKAR ELECTRIC COMPANY LTD. HUBLI–580030 (INDIA)

FORM No. 02 201 028 (ISSUE 7)

UNMENTIONED TOLERANCES

LINEAR DIMENSIONS (MACHINED)	ABOVE	0	6	315	1000
	UPTO	6	315	1000	2000
	TOL.	±0.2	±0.5	±0.8	±1.2
ANGLES		± 1/2°			

ALL INFORMATION CONTAINED IN THIS DOCUMENT IS CONFIDENTIAL AND THE PROPERTY OF KIRLOSKAR ELECTRIC CO.LTD, REPRODUCING OF THESE IN ANY FORM IS TO BE DONE WITH THE SPECIFIC PERMISSION OF THE COMPANY.

SURFACE ROUGHNESS (MAX) AS PER KSD–02–027

Ra um	50	12.5	25	1.6	3.2	6.3	0.2	0.4	0.6	0.8	0.025	0.05	0.1
OLD	∽	▽		▽▽			▽▽▽				▽▽▽▽		
NEW													

UNMENTIONED

RAD: | UC: | CHAM: