4	3	2	1

DO NOT SCALE THE DRAWING

ALL DIMENSIONS ARE IN mm UNLESS OTHERWISE STATED

IF IN DOUBT ASK M.M.E.

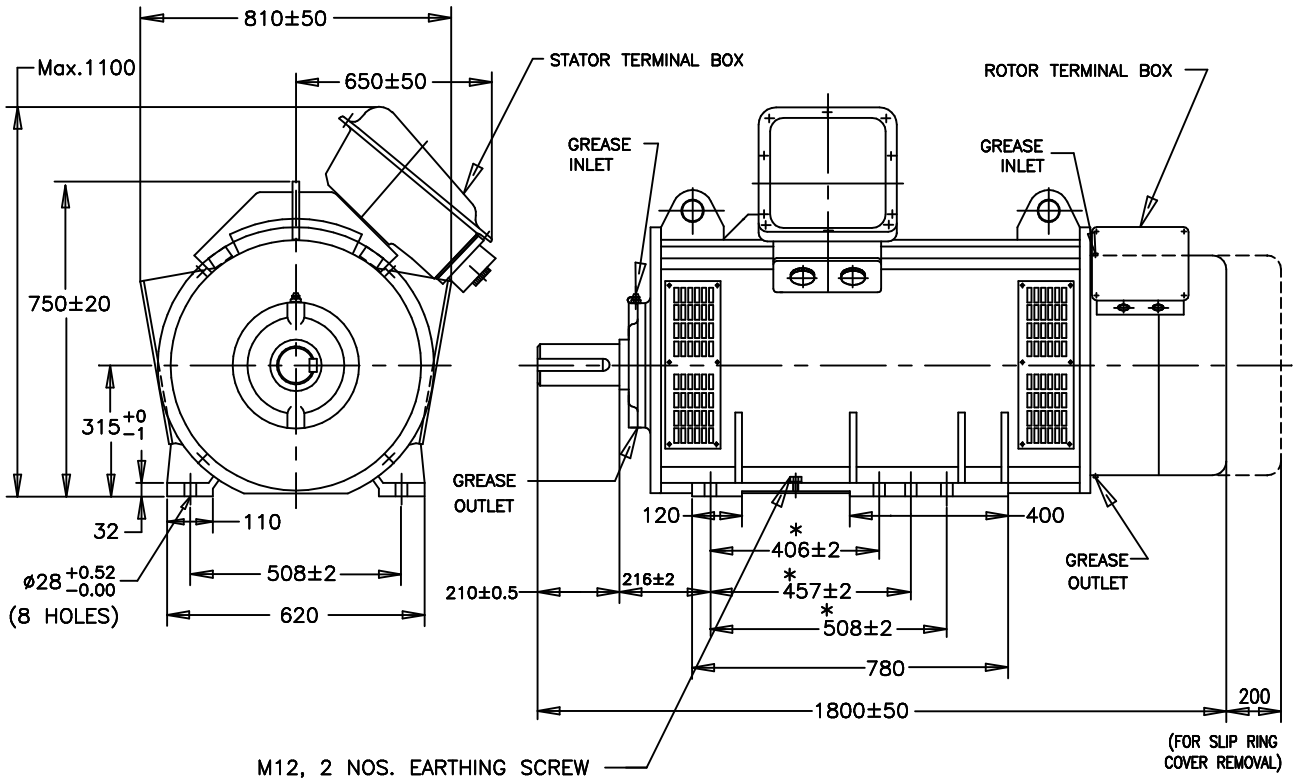

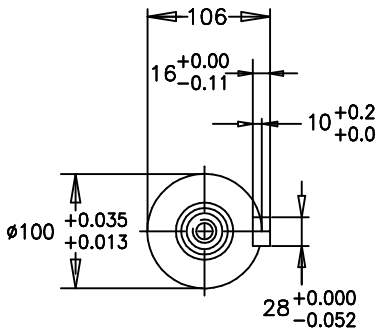

SHAFT EXTENSION DETAILS

NOTE:–

1. MOTOR CONFIRMS TO IS: 325.
2. DEGREE OF PROTECTION: IP:22.
3. PROTECTED CENTER HOLE "M24X50" DEEP AS PER IS: 2540 AT SHAFT EXTENSION.
*4. STATOR TERMINAL BOX CAN BE ROTATED THROUGH 360° IN STEPS OF 180°.
5. 3 PAIRS OF MOUNTING HOLES ARE PROVIDED ON MOTOR FRAME AT NON DRIVE END SIDE, CUSTOMER CAN CHOOSE ANY ONE PAIR FOR FOUNDATION.
6. 4 NOS. OF M10 SCREWS, ONE ON EACH FOOT PAD FOR JACKING PURPOSE.

ALL INFORMATION CONTAINED IN THIS DOCUMENT IS CONFIDENTIAL AND THE PROPERTY OF KIRLOSKAR ELECTRIC CO. LTD. REPRODUCTION OF THESE IN ANY FORM IS TO BE DONE WITH THE SPECIFIC PERMISSION OF THE COMPANY.

SIGN & DATE.	—	—
FROM dt.	—	—
DRAWING No.	—	—
THIS SUPERSEDES		
THIS IS SUPERSEDED BY		

REV.	ZONE	BRIEF RECORD	SIGNATURE	DATE	PRINTS ISSUED TO.
					MKTG. ACM

CUSTOMER / O/A No.

SCALE NTS

USED ON / TYPE

FRAME: SB315LX, 4P & ABOVE

DRAWN	-Sd-	09 03 2007
CHECKED	-Sd-	–,–
APPROVED	-Sd-	–,–

TITLE:

DIMENSIONAL DRAWING

DRG. NO. **41101007**

SHEET NO. 1 OF 1

KIRLOSKAR ELECTRIC COMPANY LTD. BANGALORE – 560055 (INDIA)

FORM No. 11401037